INDEX

				Page
Introduction				3
Reduced Table				5
Moving iron	Ammeters	EC EZC EM 45 EC FA CEC	Milliammeters, ammeters, ammeters with switch, ammeters with 2 relays	6
	Voltmeters	EC EZC EM 45 EC F CEC	Voltmeters, voltmeters with switch, voltmeters with 2 relays	8
Moving coil	Ammeters	BC BM 45 CBC	Ammeters, ammeters with 2 relays	10
	Voltmeters	BC BM 45 CBC	Voltmeters, voltmeters with 2 relays	11
Process indicators		BC ZC BM 45		12
Power demand meters		MC EMC MMC 45	Power demand meters, combined power demand meters	13
Frequency meters		HC HZC HM 45 HLC	Pointer, and reed frequency meters	14
Wattmeters		WMC WTC	Single-phase and Three-phase wattmeters	16
Varmeters		YMC YTC	Single-phase and Three-phase varmeters	17
Phase meters (cos φ)		FEMC FETC FMZ FTZ PIC	Single-phase and Three-phase electronic and induction phase meters	18
Protection		CG PRG	Overload and protection ammeter, protection bidirectional wattmeter	20
Synchronisation and marine applications		2EC 2HC 2HLC SMC STC UC CUC SYNCROMAX	Voltmeters, and double frequency meters, synchronoscopes, sequence meters, synchronisation relays	22
Insulation meter		MEG-1000		26
Hour counter meter		CH		27

General Information on Analogue Instruments

Analogue measuring instruments are those that show the Measurings by means of a moving pointer or reed that moves along a graduated scale.These types of measuring instruments are the ones used, due to their performance, Measuring accuracy and price.
Their use is very important for power control switcching and distribution panels withim electrical installations.

ESSENTIAL FEATURES OF AN ANALOGICAL MEASURING INSTRUMENT

A series of symbols that define the main features of the instrument can be seen at the lower part of the graduated scale.

Measuring systems

Moving iron	
Moving coil	
Moving coil with rectifier	
Moving coil with built in converter	
Built in converter	
Bimetallic + HM	
Vibrating reeds	
Induction	

Operating position

Vertical	
Horizontal	
• At an angle from the horizontal (i.e.: 60º)	60º

Instrument accuracy class

1,5
3

Signal type

Direct	
Alternating	
Alternating and continuous	
Three-phase alternating	
One measuring element for a 3 wire network	
One measuring element for a 4 wire network	
Two measuring elements for a 3 wire unbalanced network	
Two measuring elements for a 4 wire unbalanced network	
Three measuring elements for a 4 wire unbalanced network	

Safety, test voltages

Test voltage, 500 V	
Test voltage higher than 500 V (ex.: 2 kV)	2
Instrument not subject to dielectric tests	0
High voltage	
High voltage in accessories and/or instruments (i.e.: voltmeters)	V

Electrical and Mechanical Features

Insulation voltage
2 kV, 50 Hz, 1 min between mechanism and casing, and between electrically insulated terminals.

Permanent overloads
Voltage circuits: 1.2 U_n
1.2 I_n (1.5 I_n current circuits for moving iron).

Short duration overloads
Voltage circuits: 2 U_n for 5 s
Current circuits: 5 I_n for 30 s
10 I_n for 5 s
40 I_n for 1 s

MAGNITUDES OF INFLUENCE FOR THE ACCURACY CLASS

Fixing position
All instruments are designed to be mounted in a vertical position. On request, other inclined or horizontal models are supplied The tolerance is ± 5º for any type.

Environmental temperature
The effect of temperature on the accuracy class depends on the Measuring range. In general, the instruments maintain their accuracy class between +10 ºC and +30 ºC. This interval may be lower in particularly low measuring ranges. The limits are then indicated on the scale.
On request the instruments may be adjusted for temperatures which are outside the above stated interval.

Temperature limits
The measuring instruments and their accessories withstand temperature variations from -25 ºC to +40 ºC (55 ºC in the tropicalysed version) without permanent fault.

Relative humidity
The accuracy class is maintained within the interval of 25 to 80 % of non condensing relative humidity.

Magnetic field
All instruments maintain their accuracy class under the external influence of a magnetic field of ≤ 0.5 mT.

Ferromagnetic support
The nature and thickness of the panel cover does not affect the accuracy class except for highly sensitive instruments. Here, the scales are marked with the Fe symbol followed by the thickness of the cover.

Auxiliary power supply
The accepted tolerance for nominal values of the auxiliary power supply is:
• voltage: +10 % / -15 %
• frequency: 45...65 Hz

Vibrations
The instruments and their accessoriesresist a vibration level of ±0.25 mm of amplitude at a frequency of 50 cycles/s. This vibration is equivalent to an acceleration equal to 2.5 *g*, for 20 minutes, between the three perpendicular axes.

Protection degree
Under normal operation, the instrument cases have a protecting degree of IP 52 and their terminals IP 40. As an option, the cases comply with IP 54 or IP 55 and their terminals with IP 20 .

Pointers
According to DIN 43802.
On request, with blade or tube pointers (Fig. 1).

Tropical weather resistant (TROP)
For TROP, and according to the DIN 40040 standard, the instruments are be protected against corrosive atmospheres and will endure temperatures between -25 ºC and +55 ºC, with a non condensed relative humidity of 95 %. This humidity refers to a maximum temperature of 30 ºC and 30 days per year, the remaining 278 days of the year the humidity must not exceed 75 %.
There for, the instruments may be set for reference temperature values above 20 ºC. For these events the ranges are marked with the word TROP, followed by the temperature to which they have been set.

Impacts
The instruments and their accessories can support five impacts with an acceleration of 15 *g*, applied in the direction of the three perpendicular axes.

Zero correction
Setting the adjustment lengths for the zero corrector, on both sides of its standby position, is not superior to +/- 2 % of the range length.

Casings
The casings and frames for all instruments are made of self extinguishing ABS, according to UL 94, with high impact resistance.
The size of casings and frames are within the DIN 43700 and DIN 43718 standards, respectively.
The bases are made from self extinguishing reinforced PPO, according to UL 94, with high impact resistance and maximum electrical Insulation.

Standards
IEC 51, VDE 410, DIN 43780, BS 89, UL 94, EN 60051.

Certificates
Lloyd's Register of Shipping.

Ranges
According to standards:
DIN 43701 for end of scale values.
DIN 43802 for division values.
Divisions and membering for standardised ranges are according to the following examples in Figs. 2 and 3.
The scale final values higher than 1000 are shown in units of one thousand.

Fig. 1

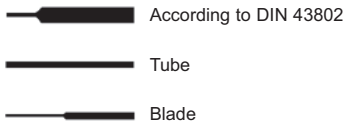

Fig. 2

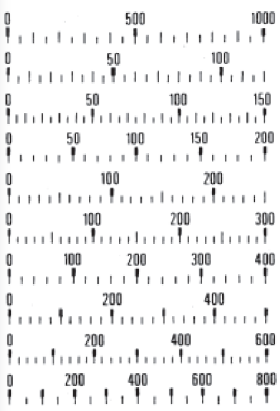

For instruments in casings DIN 48x48 and 72x72

Fig. 3

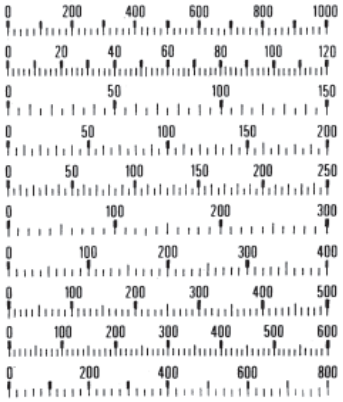

For instruments in casings DIN 96x96 and 144x144

ANALOGUE INSTRUMENTATION - CONTENTS

	Measuring system	Mounting	Specifications	Type	Range	Dimensions	Accuracy	Scale	Setting	Page
Ammeters	HM	Panel	milliammeter	EC	100...600 mA	48 x 48, 72 x 72, 96 x 96, 144 x 144	1,5	90º	P2	6
			-	EC	5...100 A,.../5A					
				EZC	.../5A	72 x 72, 96 x 96		240º		
			with switch	EC FA	.../5A			90º	P1	
			with relays	CEC	.../5A	96 x 96				
		DIN rail	-	EM 45	5...60 A, .../5A	85 x 52			P2	
	BM	Panel	-	BC	5...60 A, .../60 mV	48 x 48, 72 x 72, 96 x 96, 144 x 144			P1	10
			with relays	CBC	... / 60 mV	96 x 96				
		DIN rail	-	BM 45	5...60 A, .../60 mV	85 x 52				
Voltmeters	HM	Panel	-	EC	150 ... 600 V, .../110 V	48 x 48, 72 x 72, 96 x 96, 144 x 144	1,5	90º	P1	8
				EZC	250 V, 500 V	72 x 72, 96 x 96		240º		
			with switch	EC F	150 ... 600 V			90º		
			with relays	CEC	150 ... 600 V, .../110 V	96 x 96				
		DIN rail	-	EM 45	300 V, 500 V, .../110 V	85 x 52				
	BM	Panel	-	BC	0...600 V	48 x 48, 72 x 72, 96 x 96, 144 x 144			P2	11
			with relays	CBC	... / 60 mV	96 x 96			P1	
		DIN rail	-	BM45	15...150 V	85 x 52				
Process indicator	BM	Panel	-	BC	0...10 V, 0/4... 20 mA	48 x 48, 72 x 72, 96 x 96, 144 x 144	1,5	90º	P2	12
				ZC	0...10 V, 4... 20 mA, .../60 mV			240º	P1	
		DIN rail		BM	0...10 V, 0/4... 20 mA	85 x 52		90º		
Power demand meters	-	Panel	Bimetallic	MC	.../5 A				P1,2	13
			Bimetallic + HM	EMC					P2	
	-	DIN rail	Bimetallic	MMC 45		85 x 52	3		P1,2	
Frequency meters	Pointer	Panel	-	HC	45...65 according to type	48 x 48, 72 x 72, 96 x 96, 144 x 144	0,5	90º	-	14
			-	HZC		96 x 96, 144 x 144		240º		
		DIN rail	-	HM		85 x 52		90º		
	Reeds	Panel	-	HLC		72 x 72, 96 x 96, 144 x 144		-		15
Wattmeter		Panel	Single-phase	WMC	400 V, .../5 A	96 x 96, 144 x 144	1,5	90º	P1	16
			Three-phase	WTC						
Varmeter		Panel	Single-phase	YMC	400 V, .../5 A	96 x 96, 144 x 144	1,5	90º	P1	17
			Three-phase	YTC						
Phase meters (cos φ)	electronic	Panel	Single-phase	FEMC	cos φ 0,5 - 1 - 0,5	96 x 96, 144 x 144	1,5	90º	P1	18
			Three-phase	FETC						
			Single-phase	FMZ				240º		
			Three-phase	FTZ						
	induction		Single-phase	PIC	cos φ 0 - 1 - 0			90º		19
			Three-phase	PIC	cos φ 0 - 1 - 0					

Moving Iron Ammeters

- Casings DIN 48-72-96-144
- Class 1.5
- Measuring in true effective value from 100 mA ... 100 A
- Exchangeable scales for EC48, EC72, EC96, EM 45, EC 72 FA, EC 96 FA
- Completely configurable alarm system for CEC 96

Ammeters, 90°					
Type	**EC 48**	**EC 72**	**EC 96**	**EC 144**	**EM 45**
Class	1,5				
Scale	90º , P2				
a **b** **c**	48 48 66,2	72 72 49,2	96 96 49,2	144 144 71,8	85 52 65
Weight (g)	85	180	220	430	142
mA					
100	M10111	M10121	M10131	M10142	M10151
150	M10112	M10122	M10132	M10142	M10152
250	M10114	M10124	M10134	M10144	M10154
300	M10115	M10125	M10135	M10145	M10155
400	M10116	M10126	M10136	M10146	M10156
500	M10117	M10127	M10137	M10147	M10157
600	M10118	M10128	M10138	M10148	M10158
A					
5	M10212	M10222	M10232	M10242	M10152
10	M10213	M10223	M10233	M10243	M10153
15	M10214	M10224	M10234	M10244	M10154
20	M10215	M10225	M10235	M10245	M10155
25	M10216	M10226	M10236	M10246	M10156
30	M10217	M10227	M10237	M10247	M10157
40	M10218	M10228	M10238	M10248	M10158
50	M10219	M10229	M10239	M10249	M10159
60	M1021A	M1022A	M1023A	M1024A	M1015A
75	-	M1022B	M1023B	M1024B	-
100	-	M1022C	M1023C	M1024C	-
.../5 A (*)	M10210	M10220	M10230	M10240	M10150

Ammeters, 240°		Ammeters with switch		Ammeters with 2 relays
Type	**EZC 72**	**EZC 96**	**EC 72 FA**	**EC 96 FA**	**CEC 96**
Class	1,5				
Scale	240º, P2		90º, P1		90º , P1
a **b** **c**	72 72 49,2	96 96 49,2	72 72 49,2	96 96 49,2	96 96 85,3
Weight (g)	180	220	180	220	435
mA					
.../5 A(*)	M10920	M10930	M10521	M10531	M14810

(*) Exchangeable scales

Exchangeable scales

Exchangeable scales, HM ammeters						
Type	SEC 48	SEC 72	SEC 96	SEM 45	SEC 72 FA	SEC 96 FA
Equipment	EC 48	EC 72	EC 96	EM 45	EC 72 FA	EC 96 FA
A						
50/5	M102Z9	M102Y9	M102X9	M105X9	M105Y9	M105X9
60/5	M102ZA	M102YA	M102XA	M105XA	M105YA	M105XA
75/5	M102ZB	M102YB	M102XB	M102VB	M105YB	M105XB
100/5	M102ZC	M102YC	M102XC	M102VC	M105YC	M105XC
125/5	M102ZD	M102YD	M102XD	M102VD	M105YD	M105XD
150/5	M102ZE	M102YE	M102XE	M102VE	M105YE	M105XE
200/5	M102ZF	M102YF	M102XF	M102VF	M105YF	M105XF
250/5	M102ZG	M102YG	M102XG	M102VG	M105YG	M105XG
300/5	M102ZH	M102YH	M102XH	M102VH	M105YH	M105XH
400/5	M102ZJ	M102YJ	M102XJ	M102VJ	M105YJ	M105XJ
500/5	M102ZK	M102YK	M102XK	M102VK	M105YK	M105XK
600/5	M102ZL	M102YL	M102XL	M102VL	M105YL	M105XL
750/5	M102ZM	M102YM	M102XM	M102VM	M105YM	M105XM
800/5	M102ZN	M102YN	M102XN	M102VN	M105YN	M105XN
1 000/5	M102ZP	M102YP	M102XP	M102VP	M105YP	M105XP
1 200/5	M102ZQ	M102YQ	M102XQ	M102VQ	M105YQ	M105XQ
1 500/5	M102ZR	M102YR	M102XR	M102VR	M105YR	M105XR
2 000/5	M102ZS	M102YS	M102XS	M102VS	M105YS	M105XS
2 500/5	M102ZT	M102YT	M102XT	M102VT	M105YT	M105XT
3 000/5	M102ZU	M102YU	M102XU	M102VU	M105YU	M105XU
4 000/5	M102ZV	M102YV	M102XV	M102VV	M105YV	M105XV
5 000/5	M102ZW	M102YW	M102XW	M102VW	M105YW	M105XW

Exchangeable scales, HM ammeters			
Type	SEC 48	SEC 72	SEC 96
Equipment	EC 48	EC 72	EC 96
A			
5/5	M102Z2	M102Y2	M102X2
10/5	M102Z3	M102Y3	M102X3
15/5	M102Z4	M102Y4	M102X4
20/5	M102Z5	M102Y5	M102X5
25/5	M102Z6	M102Y6	M102X6
30/5	M102Z7	M102Y7	M102X7
40/5	M102Z8	M102Y8	M102X8

Features

Type	EC	EM	EZC	EC FA	CEC 96
Auxiliary power supply					230 V a.c.
Consumption		-			2,5 V·A
Frequency		-			40 ... 90 Hz
Input circuit					
Consumption		0,3 ... 1,5 V·A			0,2 V·A
Frequency		20 ... 100 Hz			45 ... 65 Hz
Overloads		1,2 I_n permanent 5 I_n for 30 s 10 I_n for 5 s 40 I_n for 1 s			1,2 I_n permanent
Accuracy		1,5 % FS			
Environmental conditions					
Operating temperature		+10 ºC / +30 ºC			+ 5 ºC / +55 ºC
Limit temperature		- 25 ºC / +40 ºC			-25º C / +70º C
Assembly features					
Dimensions		See previous table			
Weight		See previous table			
Casing type	panel	DIN rail	panel	panel	panel
Terminal protection degree		IP 00			IP 20
Casing protection degree		IP 52			
Insulation voltage		2 kV, 50 Hz, 1 min between mechanism and casing			3 kV , 50 Hz, 1min
Standards		**BS 89, EN 60051, IEC 144, UL 94, DIN 43780, IEC 51, UNE 21318, CE**			**IEC 51, IEC 1010, IEC 529, IEC 255, IEC 278, IEC 414, IEC 144, LLOYD'S (TEST. ESP. Nº1)**

Moving Iron Voltmeters

- Casings DIN 48-72-96-144
- Class 1.5
- Measuring in true effective value from 0 ... 600 V a.c.
- Exchangeable scales for EC48, EC72, EC96, EM 45
- Completely configurable alarm system for CEC 96

Voltmeters, 90º						Voltmeters, 240º		Voltmeters with 2 relays
Type								
	EC 48	EC 72	EC 96	EC 144	EM 45	EZC 72	EZC 96	CEC 96
Class	1,5					1,5		1,5
Scale	90º , P1					240º, P1		90ª, P1
a b c	48 48 66,2	72 72 49,2	96 96 49,2	144 144 71,8	85 52 65	72 72 49,2	96 96 49,2	96 96 85,3
Weight (g)	85	180	220	430	142	180	220	435
V								
150	-	-	-	-	-	-	-	M14821
250	M10415	M10425	M10435	M10445	-	M11125	M11135	M14822
300	M10416	M10426	M10436	M10446	M10456	-	-	M14823
400	M10417	M10427	M10437	M10447	-	-	-	M14824
500	M10418	M10428	M10438	M10448	M10458	M11128	M11138	M14825
600	M10419	M10429	M10439	M10449	-	-	-	M14826
.../110 V(*)	M10410	M10420	M10430	M10440	M10450	-	-	M14820

(*) Exchangeable scales

Voltmeters with switch					
Type					
	Three-phase 3 wire		Three-phase 4 wire		with sequence meter
	EC 72 F III	EC 96 F III	EC 72 F III +N	EC 96 F III *N	EC 96 FN-S
Class	1,5				
Scale	90 º , P1				
a b c	72 72 49,2	96 96 49,2	72 72 49,2	96 96 49,2	96 96 49,2
Weight (g)	180	220	180	220	220
V					
250	M10625	M10635	M10725	M10735	-
300	M10626	M10636	M10726	M10736	-
400	M10627	M10637	M10727	M10737	-
500	M10628	M10638	M10728	M10738	M11038
600	M10629	M10639	M10729	M10739	-

Exchangeable scales

Exchangeable scales, HM voltmeters				
Type	**SEC 48**	**SEC 72**	**SEC 96**	**SEM 45**
Equipment	**EC 48**	**EC 72**	**EC 96**	**EM 45**
V				
1 000/110	M104Z1	M104Y1	M104X1	M104V1
3 300/110	M104Z2	M104Y2	M104X2	M104V2
6 600/110	M104Z3	M104Y3	M104X3	M104V3
13 200/110	M104Z4	M104Y4	M104X4	M104V4
15 000/110	M104Z5	M104Y5	M104X5	M104V5
20 000/110	M104Z6	M104Y6	M104X6	M104V6
22 000/110	M104Z7	M104Y7	M104X7	M104V7
25 000/110	M104Z8	M104Y8	M104X8	M104V8

Features

Type	EC	EM	EZC	EC F	CEC 96
Auxiliary power supply					230 V a.c
Consumption		-			2,5 V·A
Frequency		-			40 ... 90 Hz
Input circuit					
Consumption		1 ... 4 V·A			0,2 V·A
Frequency		20 ... 100 Hz			45 ... 65 Hz
Overvoltages		1,5 U_n permanent 2 U_n for 5 s			1,2 U_n permanent
Accuracy		1,5 % FS			
Environmental conditions					
Operating temperature		+10 / +30 ºC			+5 ºC / +55 ºC
Limit temperature		- 25 ºC / +40 ºC			-25 ºC / +70 ºC
Assembly features					
Dimensions		See previous table			
Weight		See previous table			
Casing type	panel	DIN rail	panel	panel	panel
Terminal protection grade		IP 00			IP 20
Casing protection grade		IP 52			
Insulation voltage		2 kV, 50 Hz, 1 min between mechanism and casing			3 kV, 50 Hz, 1 min
Standards		**BS 89, EN 60051, IEC 144, UL 94, DIN 43780, IEC 51, UNE 21318, CE**			**IEC 51, IEC 1010, IEC 529, IEC 255, IEC 278, IEC 414, IEC 144, LLOYD'S (TEST. ESP. Nº1)**

Moving Coil Ammeters

- Casings DIN 48-72-96-144
- Class 1.5
- Measuring in DC for 25 μA ... 60 A, or 60 ... mV
- Exchangeable scales for BC48, BC72, BC96, BM 45
- Completely configurable alarm system for CBC 96

Ammeters, 90º						Ammeters with 2 relays
Type						
	BC 48	BC 72	BC 96	BC 144	BM 45	CBC 96
Class	1,5					1,5
Scale	90º , P1					90º, P1
a b c	48 48 66,2	72 72 49,2	96 96 49,2	144 144 71,8	85 52 65	96 96 85,3
Weight (g)	75	170	210	420	110	435
A						
5	M11412	M11422	M11432	M11442	M11452	-
10	M11413	M11423	M11433	M11443	M11453	-
25	M11416	M11426	M11436	M11446	M11456	-
50	M11419	M11429	M11439	M11449	M11459	-
60	-	M1142A	M1143A	M1144A	M1145A	-
.../60 mV(*)	M11410	M11420	M11430	M11440	M11450	M14830

(*) Exchangeable scales

Exchangeable scales				
Type	SBC 48	SBC 72	SBC 96	SBM 45
Equipment	BC 48	BC 72	BC 96	BM 45
A / mV				
50/60	M114Z9	M114Y9	M114X9	M114V9
60/60	M114ZA	M114YA	M114XA	M114VA
75/60	M114ZB	M114YB	M114XB	M114VB
100/60	M114ZC	M114YC	M114XC	M114VC
150/60	M114ZE	M114YE	M114XE	M114VE
200/60	M114ZF	M114YF	M114XF	M114VF
250/60	M114ZG	M114YG	M114XG	M114VG
300/60	M114ZH	M114YH	M114XH	M114VH
400/60	M114ZJ	M114YJ	M114XJ	M114VJ
600/60	M114ZL	M114YL	M114XL	M114VL
1 000/60	M114ZP	M114YP	M114XP	M114VP
1 500/60	M114ZR	M114YR	M114XR	M114VR
2 500/60	M114ZT	M114YT	M114XT	M114VT

Features

	BC	BM	CBC 96
Auxiliary power supply			230 V a.c.
Consumption	-		2,5 V·A
Frequency	-		40 ... 90 Hz
Input circuit			
Consumption	60 mV		0,2 V·A
Overloads	1,2 I_n permanent 5 I_n for 30 s 10 I_n for 5 s 40 I_n for 1 s		
Accuracy	1,5 % FS		
Environmental conditions			
Operating temperature	+10 ºC / +30 ºC		+5 ºC / +55 ºC
Limit temperature	- 25 ºC / +40 ºC		-25 ºC / +70 ºC

	BC	BM	CBC 96
Assembly features			
Dimensions	See previous table		
Weight	See previous table		
Casing type	panel	DIN rail	panel
Terminal protection grade	IP 00		IP 20
Casing protection grade	IP 52		
Insulation voltage	2 kV, 50 Hz, 1 min between mechanism and casing		
Standards	**BS 89, EN 60051, IEC 144, UL 94, DIN 43780, IEC 51, UNE 21318**		**IEC 51, IEC 1010, IEC 529, IEC 255, IEC 278, IEC 414, IEC 144, LLOYD'S (TEST. ESP. Nº1)**

Moving Coil Voltmeters

- Casings DIN 48-72-96-144
- Class 1.5
- Measuring in DC for 10 mV ... 600 V d.c.
- Exchangeable scales for BC48, BC72, BC96, BM 45
- Completely configurable alarm system for CBC 96

Type	Voltmeters , 90º					Voltmeters with relay
	BC 48	BC 72	BC 96	BC 144	BM 45	CBC 96
Class	1,5					
Scale	90º , P1					90º, P1
a b c	48 48 66,2	72 72 49,2	96 96 49,2	144 144 71,8	85 52 65	96 96 85,3
Weigth (g)	75	170	210	420	110	435
V						
0...10 V	M11813	M11823	M11833	M11843	-	-
1	M11711	M11721	M11731	M11741	-	-
15	M11714	M11724	M11734	M11744	M11754	-
30	M11716	M11726	M11736	M11746	M11755	-
60	M11718	M11728	M11738	M11748	M11756	-
100	M11719	M11729	M11739	M11749	M11757	-
150	M1171A	M1172A	M1173A	M1174A	M11758	M14841
250	M1171B	M1172B	M1173B	M1174B	-	M14842
300	-	-	-	-	-	M14843
400	M1171D	M1172D	M1173D	M1174D	-	M14844
500	M1171E	M1172E	M1173E	M1174E	-	M14845
600	M1171F	M1172F	M1173F	M1174F	-	M14846

Features

	BC	BM	CBC 96
Auxiliary power supply			230 V a.c.
Consumption	-		2,5 V·A
Frequency	-		40 ... 90 Hz
Input circuit			
Consumption	1 000 Ω/V		0,2 V·A
Frequency	20 ... 100 Hz		45 ... 65 Hz
Overvoltages	1,5 U_n permanent 2 U_n for 5 s		1,2 U_n permanent
Temp. coefficient			100 ppm/ºC
Accuracy	1,5 % FS		
Environmental conditions			
Operating temperature	+10 ºC / +30 ºC		+5 ºC / +55 ºC
Limit temperature	- 25 ºC / +40 ºC		-25 ºC / +70 ºC

	BC	BM	CBC 96
Assembly features			
Dimensions	See previous table		
Weight	See previous table		
Casing type	panel	DIN rail	panel
Terminal protection grade	IP 00		IP 20
Casing protection grade	IP 52		
Insulation voltage	2 kV, 50 Hz, 1 min between mechanism and casing		
Standards	**BS 89, EN 60051, IEC 144, UL 94, DIN 43780, IEC 51, UNE 21318,**		**IEC 51, IEC 1010, IEC 529, IEC 255, IEC 278, IEC 414, IEC 144, LLOYD'S (TEST. ESP. Nº1)**

Process Indicators

- Casings DIN 48-72-96-144
- Class 1.5
- Measuring in DC for 25 µA ... 60 A d.c., or .../60 mV d.c.
- Exchangeable scales for BC48, BC72, BC96, BM 45

Process indicators, 90º						Process indicators, 240º			
Type									
	BC 48	BC 72	BC 96	BC 144	BM 45	ZC 48	ZC 72	ZC 96	ZC 144
Class	1,5					1,5			
Scale	90º , P1					240º, P1			
a b c	48 48 66,2	72 72 49,2	96 96 49,2	144 144 71,8	85 52 65	48 48 66,2	72 72 49,2	96 96 49,2	144 144 71,8
Weight (g)	75	170	210	420	110	75	170	210	420
Scope									
0...10 V	M11813	M11823	M11833	M11843	M11853	M12513	M12523	M12533	M12543
0...20 mA	M11812	M11822	M11832	M11842	M11852	-	-	-	-
4...20 mA	M11811	M11821	M11831	M11841	M11851	M12511	M12521	M12531	M12541
.../60 mV (*)	-	-	-	-	-	M12510	M12520	M12530	M12540

(*) Exchangeable scales				
Type	SIP 48	SIP 72	SIP 96	SIPM 45
Equipment	BC 48	BC 72	BC 96	BM 45
Scope				
0...10 V	M118Z3	M118Y3	M118X3	M118V3
0...20 mA	M118Z2	M118Y2	M118X2	M118V2
4...20 mA	M118Z1	M118Y1	M118X1	M118V1

Features

	BC	BM	ZC
Input circuit			
Consumption	1000 Ω/V		V·A
Overvoltages	1,5 U_n permanent 2 U_n for 5 s		
Accuracy	1,5 % FS		
Environmental conditions			
Operating temperature	+10 ºC / +30 ºC		
Limit temperature	- 25 ºC / +40 ºC		

	BC	BM	ZC
Assembly features			
Dimensions	See previous table		
Weight	See previous table		
Casing type	panel	DIN rail	panel
Terminal protection grade	IP 00		
Casing protection grade	IP 52		
Insulation voltage	2 kV, 50 Hz, 1 min between mechanism and casing		
Standards	**BS 89, EN 60051, IEC 144, UL 94, DIN 43780, IEC 51, UNE 21318,**		

Power Demand Meters

- Casings DIN 48-72-96-144
- Class 3
- Measuring in DC for 25 µA ... 60 A d.c., or .../60 mVd.c.
- Exchangeable scales for MC48, MC72, MC96, MMC 45, EMC72, EMC96
- Thermal inertia times of 15 min (on request 8 and 30 min)

	Bimetallic power demand ammeter					Bimetallic power demand ammeter + moving iron ammeter		
Type								
	MC 48	**MC 72**	**MC 96**	**MC 144**	**MMC 45**	**EMC 72**	**EMC 96**	**EMC 144**
Class	3					Bimetallic: 3; moving iron: 1.5		
Scale	90º , P1,2					Two scales 90°, Bimetallic: P1,2; moving iron: P2		
a	48	72	96	144	85	72	96	144
b	48	72	96	144	52	72	96	144
c	66,2	49,2	49,2	71,8	65	49,2	49,2	71,8
Weight (g)	110	140	210	420		220	260	470
A								
.../ 5 A (*)	M12211	M12221	M12231	M12241	M12651	M12622	M12632	M12642

(*) Exchangeable scales						
Type	**SMC 48**	**SMC 72**	**SMC 96**	**SMMC 45-A**	**SEMC 72**	**SEMC 96**
Equipment	**MC 48**	**MC 72**	**MC 96**	**MMC 45**	**EMC 72**	**EMC 72**
A						
100/5	M122ZC	M122YC	M122XC	M126VC	M126YC	M126XC
200/5	M122ZF	M122YF	M122XF	M126VF	M126YF	M126XF
300/5	M122ZH	M122YH	M122XH	M126VH	M126YH	M126XH
400/5	M122ZJ	M122YJ	M122XJ	M126VJ	M126YJ	M126XJ
500/5	M122ZK	M122YK	M122XK	M126VK	M126YK	M126XK
600/5	M122ZL	M122YL	M122XL	M126VL	M126YL	M126XL
750/5	M122ZM	M122YM	M122XM	M126VM	M126YM	M126XM
800/5	M122ZN	M122YN	M122XN	M126VN	M126YN	M126XN
1 000/5	M122ZP	M122YP	M122XP	M126VP	M126YP	M126XP
1 500/5	M122ZR	M122YR	M122XR	M126VR	M126YR	M126XR
2 000/5	M122ZS	M122YS	M122XS	M126VS	M126YS	M126XS

Features

	MC	MMC	EMC
Input circuit			
Consumption	3,25 V·A		4,25 V·A
Overloads	1,5 I_n permanent 15 I_n for 1 s		
Accuracy	± 3 % FS		± 3 % Bim. ± 1,5 % H.M.
Environmental conditions			
Operating temperature	+10 ºC / +30 ºC		
Limit temperature	- 25 ºC / +40 ºC		

	MC	MMC	EMC
Assembly features			
Dimensions	See previous table		
Weight	See previous table		
Casing type	panel	DIN rail	panel
Terminal protection grade	IP 00		
Casing protection grade	IP 52		
Insulation voltage	2 kV,50 Hz, 1 min between mechanism and casing		
Standards	**BS 89, EN 60051, IEC 144, UL 94, DIN 43780, IEC 51, UNE 21318,**		

Pointer Frequency Meters

- Casings DIN 48-72-96-144
- Class 0.5
- Built in electronic converter

Pointer frequency meters							
	Frequency meters, 90º					Frequency meters, 240º	
Type							
	HC 48	HC 72	HC 96	HC 144	HM 45	HZC 96	HZC 144
Class	0,5					0,5	
Scale	90º					240º	
a b c	48 48 66,2	72 72 49,2	96 96 49,2	144 144 71,8	85 52 65	96 96 101.2	144 144 102
Weight (g)	95	175	215	425	250	180	520
Hz							
45...55	M12711	M12721	M12731	M12741	M12751	M12831	M12841
57...63	M12711001	M12721001	M12731001	M12741001	M12751001	M12831001	M12841001
55...65	M12711003	M12721003	M12731003	M12741003	M12751003	M12831003	M12841003
45...65	M12711004	M12721004	M12731004	M12741004	M12751004	M12831004	M12841004
47...63	M12711005	M12721005	M12731005	M12741005	M12751005	M12831005	M12841005

Features

	HC	HM	HZC
Input circuit			
Consumption	2...3 V·A		
Frequency	50 ... 400 Hz		
Overvoltages	1,2 U_n permanent 2 U_n for 5 s		
Voltage	Standard 230 V a.c. Optional 100-120 V a.c. 380-440 V a.c.		
Accuracy	0,5 % FS		
Environmental conditions			
Operating temperature	+10 ºC / +30 ºC		
Limit temperature	- 25 ºC / +40 ºC		

	HC	HM	HZC
Assembly features			
Dimensions	See previous table		
Weight	See previous table		
Casing type	panel	DIN rail	panel
Terminal protection grade	IP 00		
Casing protection grade	IP 52		
Insulation voltage	2 kV, 50 Hz, 1 min between mechanism and casing		
Standards	**BS 89, EN 60051, IEC 144, UL 94, DIN 43780, IEC 51, UNE 21318,**		

Reed Frequency Meters

- Casings DIN 72-96-144
- Class 0.5
- Accurate measuring with any type of waveform

Reed frequency meters				
Type				
		HLC 72	HLC 96	HLC 144
Class			0,5	
a b c		72 72 49,2	96 96 49,2	144 144 71,8
Weight (g)		230	300	423
Hz				
47...53, 13 reeds	50 Hz	M12921	M12931	M12941
45...55, 11 reeds		M12921002	M12931002	M12941002
47...53, 7 reeds		M12921005	M12931005	M12941005
57...63, 13 reeds	60 Hz	M12921001	M12931001	M12941001
55...65, 11 reeds		M12921003	M12931003	M12941003
57...63, 7 reeds		M12921004	M12931004	M12941004

Features

	HLC
Input circuit	
Consumption	1...3,6 V·A
Frequency	50 / 60 Hz
Overvoltages	1,2 U_n permanent 2 U_n for 5 s
Voltage	Standard 230 V a.c. Optional 100-120 V a.c. 380-440 V a.c.
Accuracy	0,5 % FS
Environmental conditions	
Operating temperature	+10 ºC / +30 ºC
Limit temperature	- 25 ºC / +40 ºC

	HLC
Assembly features	
Dimensions	See previous table
Weight	See previous table
Casing type	panel
Terminal protection grade	IP 00
Casing protection grade	IP 52
Insulation voltage	2 kV, 50 Hz, 1 min between mechanism and casing
Standards	**BS 89, EN 60051, IEC 144, UL 94, DIN 43780, IEC 51, UNE 21318,**

Wattmeters

- Casings DIN 96-144
- Class 1.5
- Built in electronic converter
- Single-phase and three-phase balanced and unbalanced circuits

Type								
	Single-phase		Balanced Three-phase		Three-phase 3 wire (ARON)		Three-phase 4 wire	
	WMC 96	WMC 144	WTC 96E	WTC 144E	WTC 96A	WTC 144A	WTC 96AN	WTC 144AN
Class	1,5							
Scale	90º P1							
a	96	144	96	144	96	144	96	144
b	96	144	96	144	96	144	96	144
c	49,2	71,8	49,2	71,8	62,9	71,8	62,9	71,8
Weight (g)	290	490	290	490	430	640	430	640
Vphase-phase	400		400		110		400	
	M13031(*)	M13041	M13032(*)	M13032	M13034	M13044	M13033(*)	M13043

(*) Exchangeable scales					
	Single-phase		Three-phase		
Type	SWM 96			SWT 96E	SWT 96AN
Equipment	WMC 96			WTC 96E	WTC 96AN
A	Base Scale	Code	Base Scale	Code	Code
50/5	20 kW	M130J9	30 kW	M130K9	M130L9
75/5	-	-	50 kW	M130KB	M130LB
100/5	40 kW	M130JC	60 kW	M130KC	M130LC
150/5	60 kW	M130JE	90 kW	M130KE	M130LE
200/5	80 kW	M130JF	120 kW	M130KF	M130LF
300/5	120 kW	M130JH	180 kW	M130KH	M130LH
400/5	160 kW	M130JJ	240 kW	M130KJ	M130LJ
500/5	200 kW	M130JK	300 kW	M130KK	M130LK
600/5	240 kW	M130JL	360 kW	M130KL	M130LL
1 000/5	400 kW	M130JP	600 kW	M130KP	M130LP
1 500/5	600 kW	M130JR	900 kW	M130KR	M130LR
2 000/5	800 kW	M130JS	1,2 MW	M130KS	M130LS
3 000/5	1,2 MW	M130JU	1,8 MW	M130KU	M130LU
4 000/5	1,6 MW	M130JV	2,4 MW	M130KV	M130LV
5 000/5	2,0 MW	M130JW	3 MW	M130KW	M130LW

(*2) On request, other values

(*3) Reference frequency 50 Hz

Features

Type	WMC	WTC
Voltage circuit		
Voltage	400 V (*2)	
Consumption	1 ... 4 V·A	
Frequency	45...65 Hz (*3)	
Overvoltages	1,25 U_n permanent 2 U_n for 5 s	
Current circuit		
Nominal current	.../ 5 A (*2)	
Consumption	0,3 ... 1,5 V·A	
Frequency	45 ... 65 Hz	
Overloads	1,2 I_n permanent 5 I_n for 30 s 10 I_n for 5 s 40 I_n for 1 s	
Accuracy	±1,5 % FS	
Environmental conditions		
Operating temperature	+10 ºC / +30 ºC	
Temperatura límite	- 25 ºC / +40 ºC	
Assembly features		
Dimensions	See previous table	
Weight	See previous table	
Casing type	panel	
Terminal protection grade	IP 00	
Casing protection grade	IP 52	
Insulation voltage	2 kV, **50 Hz, 1 min** between mechanism and casing	
Standards	**BS 89, EN 60051, IEC 144, UL 94, DIN 43780, IEC 51, UNE 21318, CE**	

VARMETERS

- Casings DIN 96-144
- Class 1.5
- Built in electronic converter
- Single-phase and three-phase balanced and unbalanced circuits

Type								
	Single-phase		Balanced Three-phase		Three-phase 3 wire (ARON)		Three-phase 4 wire	
	YMC 96	YMC 144	YTC 96E	YTC 144E	YTC 96A	YTC 144A	YTC 96AN	YTC 144AN
Class	1,5							
Scale	90º P1							
a b c	96 96 49,2	144 144 71,8	96 96 49,2	144 144 71,8	96 96 62,9	144 144 71,8	96 96 62,9	144 144 71,8
Weight (g)	290	490	290	490	430	640	430	640
V phase-phase	400 V		400		110		400	
	M13231(*)	M13241	M13232(*)	M13242	M13234	M13244	M13233(*)	M13243

(*) Exchangeable scales					
	Single-phase		Three-phase		
Type	SYM 96			SYT 96E	SYT 96AN
Equipment	YMC 96			YTC 96E	YTC 96AN
A	Base scale	Code	Base Scale	Code	Code
50/5	20 kvar	M132J9	30 kvar	M132K9	M132L9
75/5	-	-	45 kvar	M132KB	M132LB
100/5	40 kvar	M132JC	60 kvar	M132KC	M132LC
150/5	60 kvar	M132JE	90 kvar	M132KE	M132LE
200/5	80 kvar	M132JF	120 kvar	M132KF	M132LF
300/5	120 kvar	M132JH	150 kvar	M132KH	M132LH
400/5	160 kvar	M132JJ	240 kvar	M132KJ	M132LJ
500/5	200 kvar	M132JK	300 kvar	M132KK	M132LK
600/5	240 kvar	M132JL	360 kvar	M132KL	M132LL
1 000/5	400 kvar	M132JP	600 kvar	M132KP	M132LP
1 500/5	600 kvar	M132JR	900 kvar	M132KR	M132LR
2 000/5	800 kvar	M132JS	1,2 Mvar	M132KS	M132LS
3 000/5	1,2 Mvar	M132JU	1,8 Mvar	M132KU	M132LU
4 000/5	1,6 Mvar	M132JV	2,4 Mvar	M132KV	M132LV
5 000/5	2,0 Mvar	M132JW	3,0 Mvar	M132KW	M132LW

(*2) On request, others values

(*3) Reference frequency 50 Hz

FEATURES

Type	YMC	YTC
Voltage circuit		
Voltage	400 V (*2)	
Consumption	1 ... 4 V·A	
Frequency	50 Hz (*2)	20 ... 100 Hz
Overvoltages	1,25 U_n permanent 2 U_n for 5 s	
Current circuit		
Nominal current	.../ 5 A (*2)	
Consumption	0,3 ... 1,5 V·A	
Frequency	50 Hz (*2)	20 ... 100 Hz
Overloads	1,2 I_n permanent 5 I_n for 30 s 10 I_n for 5 s 40 I_n for 1 s	
Accuracy	±1,5 % FS	
Environmental conditions		
Operating temperature	+10 ºC / +30 ºC	
Temperatura límite	- 25 ºC / +40 ºC	
Assembly features		
Dimensions	See previous table	
Weight	See previous table	
Cashing type	panel	
Terminal protection grade	IP 00	
Casing protection grade	IP 52	
Insulation voltage	2 kV, 50Hz, 1 min between mechanism and casing	
Standards	**BS 89, EN 60051, IEC 144, UL 94, DIN 43780, IEC 51, UNE 21318, CE**	

Electronic Phase Meters (cos φ)

- Casings DIN 96-144
- Class 1.5
- Electronic system converter
- Single-phase and three-phase balanced circuits
- cos φ: 0,5-1-0,5

Type	Electronic phase meters, 90º				Electronic phase meters, 240º			
	Single-phase		Balanced Three-phase		Single-phase		Balanced Three-phase	
	FEMC 96	FEMC 144	FETC 96	FETC 144	FMZ 96	FMZ 144	FTZ 96	FTZ 144
Class	1,5							
Scale	90 º P1				240º P1			
a b c	96 96 62,9	144 144 71,8	96 96 62,9	144 144 71,8	96 96 101,2	144 144 71,8	96 96 101,2	144 144 71,8
Weight (g)	480	690	480	690	500	710	500	710
V	cos φ 0,5-1-0,5							
100/√3	M13431	M13441	-	-	M13531	M13541	-	-
110/√3	M13432	M13442	-	-	M13532	M13542	-	-
100	M13433	M13443	M1343C	M1344C	M13533	M13543	M1353C	M1354C
110	M13434	M13444	M1343D	M1344D	M13535	M13545	M1353D	M1354D
230	M13435	M13445	M1343E	M1344E	M13535	M13545	M1353E	M1354E
400	M13436	M13446	M1343F	M1344F	M13536	M13546	M1353F	M1354F
440	M13437	M13447	M1343G	M1344G	M13537	M13547	M1353G	M1354G
500	M13438	M13448	M1343H	M1344H	M13538	M13548	M1353H	M1354H

Features

	FEMC / FETC	FMZ / FTZ
Voltage circuit		
Consumption	1 V·A	4 V·A
Frequency	47,5...52,5 (*3)	
Overvoltages	1,2 U_n permanent 2 U_n for 5 s	
Current circuit		
Nominal current	.../ 5 A (*)	
Consumption	1,5 V·A	0,75 V·A
Frequency	20 ... 100 Hz	
Overloads	1,2 I_n permanent 5 I_n for 30 s 10 I_n for 5 s 40 I_n for 1 s	
Accuracy	±1,5 % FS	

	FEMC / FETC	FMZ / FTZ
Environmental conditions		
Operating temperature	+10 ºC / +30 ºC	
Limit temperature	- 25 ºC / +40 ºC	
Assembly features		
Dimensions	See previous table	
Weight	See previous table	
Casing type	panel	
Terminal protection grade	IP 00	
Casing protection grade	IP 52	
Insulation voltage	2 kV, 50 Hz, 1 min between mechanism and casing	
Standards	**BS 89, EN 60051, IEC 144, UL 94, DIN 43780, IEC 51, UNE 21318**	

(*) On request, others values

(*3) Reference frequency 50 Hz

Induction Phase Meters (cos φ)

- Casings DIN 96-144
- Class 1.5
- Single-phase and three-phase balanced and unbalanced circuits
- cos φ: 0-1-0

Type	Induction phase meters 360º					
	Single-phase		Balanced Three-phase		Unbalanced Three-phase	
	PIC 96 A	PIC 144 A	PIC 96 B	PIC 144 B	PIC 96 E	PIC 144 E
Class	1,5					
Scale	360º , 1 P					
a b c	96 96 101,2	144 144 102	96 96 101,2	144 144 102	96 96 101,2	144 144 102
Weight (g)	1 910	1 960	1 410	1 460	1 410	1 460
V	cos φ 0-1-0					
110	M13631	M13641	M13634	M13644	M13637	M13647
230	M13632	M13642	M13635	M13645	M13638	M13648
400	M13633	M13643	M13636	M13646	M13639	M13649

Features

	PIC A / PIC B	PIC E
Voltage circuit		
Consumption	5 V·A / 20 mA	15 mA
Frequency	49,5...50,5 Hz (*3) 59,4... 60,6 Hz (*2)	4T-5T (*3) 54 ... 66 Hz(*2)
Overvoltages	1,2 U_n permanent 2 U_n for 5 s	
Current circuit		
Nominal current	.../ 5 A (*)	
Consumption	4 V·A	2,5 V·A
Frequency	50 Hz	
Overloads	1,2 I_n permanent 5 I_n for 30 s 10 I_n for 5 s 40 I_n for 1 s	
Accuracy	±1,5 % FS	

	PIC A / PIC B	PIC E
Environmental conditions		
Operating temperature	+10 ºC / +30 ºC	
Limit temperature	- 25 ºC / +40 ºC	
Assembly features		
Dimensions	See previous table	
Weight	See previous table	
Casing type	panel	
Terminal protection grade	IP 00	
Casing protection grade	IP 52	
Insulation voltage	2 kV, 50 Hz, 1 min between mechanism and casing	
Standards	**BS 89, EN 60051, IEC 144, UL 94, DIN 43780, IEC 51, UNE 21318**	

(*) On request, others values
(*2) Reference frequency 60 Hz
(*3) Reference frequency 50 Hz

Protection Ammeters for Overload and Short Circuit CG Type

- Casing DIN 96
- Class 1.5
- 2 output relays
- Easy and programmable alarm system

The **CG 96** is an electronic panel instrument which protects against overcurrent and short circuit in three-phase systems, being especially designed for generator protection. The equipment continually measures the current in each of the three-phases and gives a signal when the current in any of the 3 phases exceeds the preset trip values. The alarm is indicated by activating the output relays. The status of the output relays can be known by using the two LEDs on the front.
The scale is exchangeable and as default is supplied as twice lengthened (P2).

Measurings are made using the three external current transformers... / 5 A . The equipment simultaneously measures the three currents, although the pointer only indicates the current in one phase (the phase to be shown may be selected using an external switch).

The instrument has two independent relays: one for short circuit and the other for overload.

- Protection by overload:

- Adjustable trip point from 0 to 150 % of I_n
- Adjustable delay from 0 to 60 s
- Relay sealing* (latch): once the alarm condition is given, the relay remains activated until the instrument's auxiliary power supply is removed (even though the alarm conditions have gone)

- Protection against short circuit:

- Adjustable trip point from 150 to 300 % of I_n
- Adjustable delay from 0 to 1.2 s

Ammeters	
	Three-phase
Type	CG 96
a **b** **c**	96 96 85,3
A	3 inputs
.../5	M14713

Features

Input circuit	
Consumption	5 V·A
Frequency	20 ... 100 Hz
Overloads	2 I_n permanent 5 I_n for 30 s 10 I_n for 5 s 40 I_n for 1 s
Accuracy	1,5 % FS
Environmental conditions	
Operating temperature	+5 ºC / +55 ºC
Limit temperature	- 25 ºC / +70 ºC

Assembly features	
Dimensions (mm)	96 x 96 x 85,3
Weight (g)	435
Casing type	panel
Terminal protection grade	IP 20
Casing protection grade	IP 52
Insulation voltage	2 kV, 50 Hz, 1 min between mechanism and casing
Standards	**BS 89, EN 60051, IEC 144, UL 94, DIN 43780, IEC 51, UNE 21318, CE**

PROTECTIVE DUAL BIDIRECTIONAL WATTMETERS

- Casing DIN 96
- Class 1.5
- Dual bidirectional power indicator
- Reverse power protection
- Two Measuring controls
- Totally easy and programmable alarm system

Application

The **PGR 96** is a panel instrument to protect a generator against reverse power. It is designed to operate with process signals from the supplied converter. It has two completely configurable alarms using some microswitches located on a side window on the equipment. The Measuring and alarm control system is based on a micro-processor, which operates by sampling the input signal. The configuration of each alarm is independent, using 8 microswitches. Each alarm allows the configuration of:

- Maximum or minimum tripping
- Closure (on/off)
- Fail safe (on/off)
- Delay in connecting and disconnecting:

The alarm trip point, -20 ... 100% of the measuring, and timer time, 0 ... 30 s, are selected using four power meters, two for each alarm, located at the rear of the instrument.
It has two relays with switched contact and two LED indicating the alarm status. When there is an alarm condition and the instrument is on a timer, the corresponding LED flashes; at the end of the timed period, the relay switches and the LED remains permanently on.

	Single-phase	Balanced Three-phase	Three-phase 3 wire (ARON)	Three-phase 4 wire
	PGR 96 M	**PGR 96E**	**PGR 96A**	**PGR 96AN**
Transducer (See catalogue M2)	CW-M	CW-TE	CW-TA	CW-TAN
Class	1,5			
Scale	90º , P2			
V / A				
100...500 V .../5 A (*)	M14721	M14722	M14724	M14723
Equipment comprising converter + analogue instrument (*) Voltage and primary current indicator for the two measuring transformers as well as the end of range power.				

FEATURES

Input circuit	
Nominal current In	0 ... 20 m A d.c.
Current range	0 ...130 % I_n
Current overload	5 I_n permanent
Impedance	3 Ω
External power supply	
AC Nominal value	115 / 230 / 400 V a.c.
Frequency	40...80 Hz
Consumption	2,5 V·A
DC Nominal value	9-18 / 18-36 / 36-72 / 90-140 V d.c
Consumption	2,5 V·A

Environmental conditions	
Operating temperature	+5 ºC / +55 ºC
Limit temperature	-25 ºC /+70 ºC
Assembly features	
Dimensions (mm)	96 x 96 x 77,2
Weight (g)	435
Casing type	DIN rail
Terminal prptection grade	IP 20
Casing protection grade	IP 52
Standards	**IEC 51, IEC 1010, IEC 529, IEC 255, IEC 278, IEC 414, IEC 144**

Synchronisation and Marine Applications Equipment

- Casing DIN 96-144
- Two scales

CE

DOUBLE VOLTMETER

- Class 1,5

Double voltmeters		
Type	2 EC 96	2 EC 144
Class	1,5	
Scale	90º	
a	96	144
b	96	144
c	49,2	71,8
Weight (g)	220	430
V		
2 x .../100	M13831	M13841
2 x .../110	M13832	M13842
2 x 220	M13833	M13843
2 x 380	M13834	M13844
2 x 440	M13835	M13845

DOUBLE POINTER FREQUENCY METER

- Class 0,5
- Built in electronic converter

Double pointer frequency meters		
Type	2 HC 96	2 HC 144
Class	0,5	
Scale	90º	
a	96	144
b	96	144
c	62,9	71,8
Weight (g)	400	450
Hz		
45...55	M12732	M12742
57...63	M12732001	M12742001
55...65	M12732003	M12742003
45...65	M12732004	M12742004
47...63	M12732005	M12742005

DOUBLE REED FREQUENCY METER

- Class 0,5
- Independent Measuring of the wave form

Double reed frequency meters		
Type	2 HLC 96	2 HLC 144
Class	0,5	
Scale	-	
a	96	144
b	96	144
c	62,9	71,8
Weight (g)	400	450
Hz		
47...53, 13 reeds	M12932	M12942
57...63, 13 reeds	M12932001	M12942001
45...55, 11 reeds	M12932002	M12942002
55...65, 11 reeds	M12932003	M12942003
57...63, 7 reeds	M12932004	M12942004
47...53, 7 reeds	M12932005	M12942005

Features

Type	2 EC	2 HC	2 HLC
Input circuit			
Consumption	1 ... 4 V·A	2 ... 3 V·A	1 ... 3,6 V·A
Frequency	20 ... 100 Hz	According to type	
Overvoltages	1,2 U_n permanent 2 U_n for 5 s		
Accuracy	1,5 % FS	0,5 % FS	
Environmental conditions			
Operating temperature	+10 ºC / +30 ºC		
Limit temperature	- 25 ºC / +40 ºC		

Type	2 EC	2 HC	2 HLC
Assembly features			
Dimensions	See previous table		
Weight	See previous table		
Casing type	panel		
Terminal protection grade	IP 00		
Casing protection grade	IP 52		
Insulation voltage	2 kV, 50 Hz, 1 min between mechanism and casing		
Standards	**BS 89, EN 60051, IEC 144, UL 94, DIN 43780, IEC 51, UNE 21318**		

SYNCHROSCOPES

- Casing DIN 96-144
- Class 1.5
- 50 and 60 Hz
- For single-phase and three-phase circuits

For monitoring the frequency and phase angle difference between two generators or system and generator, when the are connected in parallel. If the difference is zero, the instrument's pointer remains on the synchronisation mark located in the middle of the scale.
The scale of the instrument is divided into two areas marked with the signs (+) and (-). These signs indicate if the machine to be connected has a higher or lower frequency than the other respectively.
The setting is carried out until the pointer is on the (-) side, but slowly turning in the (+) direction.
If the pointer stops outside the synchronisation mark, both machines are at the same frequency but the voltages are not in phase.
The instrument's pointer begins to turn in the right direction when the frequency difference is 1.5 Hz for Three-phase or 0.5 Hz for Single-phase.

PHASE SEQUENCE INDICATOR

- Casing DIN 72-96
- Class 1.5
- 50 or 60 Hz
- Includes voltage relay U_n ±15%. Low consumption

The **UC 72** and **UC 96** indicate the phase order in three-phase systems.
The **CUC 96**, as well as indicating phase sequence, includes a relay with switched contact and free of voltage. The relay is deactivated when there is no voltage or when the phase order is wrong.

Measuring system.
A completely electronic circuit with no moving parts, allows the neon indicators to be easily activated.

Scales.
Two LED, one GREEN and the other RED, indicate if the phase sequence is CORRECT or INCORRECT, respectively.

Synchroscope				
	Single-phase		Three-phase	
Type	**SMC 96**	**SMC 144**	**STC 96**	**STC 144**
Class	1,5			
a b c	96 96 101,2	144 144 102	96 96 101,2	144 144 102
Weight (g)	1 700	2 250	1 410	1 960
V				
110	M14431	M14441	M14435	M14445
230	M14432	M14442	M14436	M14446
400	M14433	M14443	M14437	M14447
500	M14434	M14444	M14438	M14448

Phase sequence indicator			
Type	**UC 72**	**UC 96**	**CUC 96**
Control relay	No		Yes
a b c	72 72 62,9	96 96 62,9	96 96 62,9
Weight (g)	200	275	375
V			
100...500	M13721	M13731	-
230	-	-	M13734
400	-	-	M13735

FEATURES

Type	SMC	STC	UC	CUC
Input circuit				
Consumption	System: 5 V·A Generator: 15 mA	System: 20 mA for circuit Generator: 15 mA for circuit	3 mA	4 V·A
Frequency	20 ... 100 Hz		50 Hz	
Overvoltages	1,2 U_n permanent 2 U_n for 5 s			
Accuracy	1,5 % FS			
Environmental conditions				
Operating temperature	+10 ºC / +30 ºC		0 / +70ºC	
Limit temperature	- 25 ºC / +40 ºC		-40ºC / +70ºC	

Type	SMC / STC	UC / CUC
Assembly features		
	See previous table	
Weight	See previous table	
Casing type	panel	
Terminal protection grade	IP 00	
Casing protection grade	IP 52	
Insulation voltage	2 kV, 50 Hz, 1 min between mecha-nism and casing	
Standards	**BS 89, EN 60051, IEC 144, UL 94, DIN 43780, IEC 51, UNE 21318**	

Synchro Max / Synchro Max PID

SYNCHRO MAX

SYNCHRO MAX PID

- All parameters are programmable via the front keypad
- Digital equipment with 4 digit display and 30 auxiliary LED
- Measuring and display of the voltage and frequency of the generator and the mains and the phase angle between them (TRMS)
- Automatic synchronisation with programming of the contactor connection delay
- Wide frequency range (35...80 Hz)
- Standard power supplies: 110, 230 and 400 V a.c.
- 3 operating modes: manual, automatic and assisted
- Digital setting (without potentiometers)
- BUILT IN PI / PID CONTROL (according to type) OF GENERATOR SPEED USING PULSE OUTPUT
- Protection using password

Purpose of the equipment

The Synchro Max is a synchronisation relay which synchronises a generator with the network or with another generator (or the main power) taken as a reference. This allows both to be connected in parallel in emergency or support applications when it is needed to provide more power.

Front of the equipment

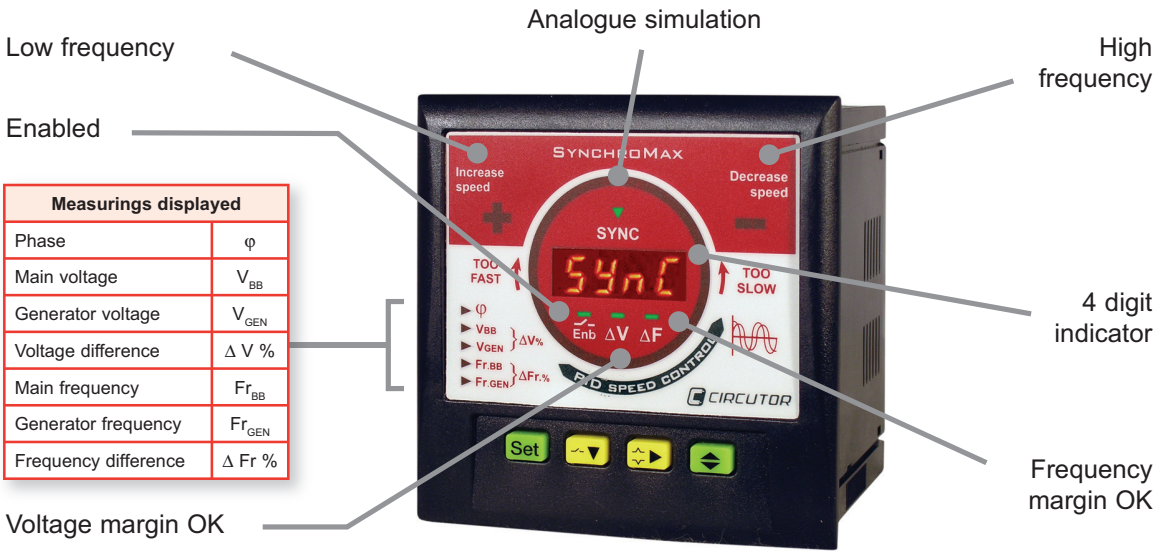

Measurings displayed	
Phase	φ
Main voltage	V_{BB}
Generator voltage	V_{GEN}
Voltage difference	Δ V %
Main frequency	Fr_{BB}
Generator frequency	Fr_{GEN}
Frequency difference	Δ Fr %

TYPES

CIRCUTOR has two type of synchronisation relay: the **SYNCHRO MAX** and the **SYNCRO MAX PID.**

Synchro Max

The **Synchro Max** can adapt the generator frequency using a built in PI control algorithm, to be able to connect it in parallel with the mains. It also measures and displays the voltage, phase and frequency parameters both for the generator and the mains and the differences between them.

Synchro Max PID

The **Synchro Max PID** has all the excellent features of Measuring, display and programming of the standard **Synchro Max**, and additiondly a powerful PID algorithm to control the generator frequency. This type of control makes the **Synchro Max PID** an extremely quick device for synchronising and therefore makes it suitable for reducing synchronisation costs because it minimises times invested in carrying this out. This type of control is suitable for mini hydraulic power plants among many other applications.

(*) On the right it can be seen how the **SYNCHRO MAX** gives the decission in advances t_{brk} seconds before (previously set by the user) to take into account the generator's contactor connection delay.

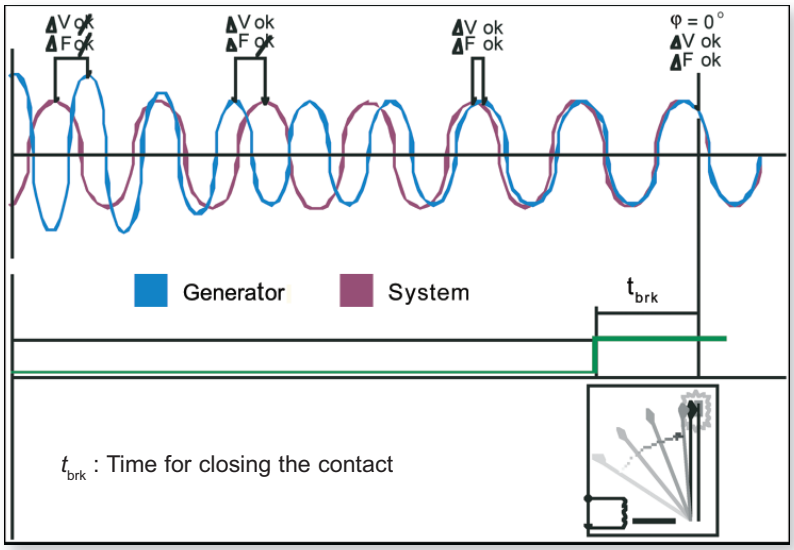

FEATURES

Auxiliary power supply	Alternating voltage
Standard values	110, 230, 400 V a.c. (+15 / -10 %)
Frequency margin	35 ... 450 Hz
Maximum consumption	10 V·A
Measuring circuit	
Measuring range	30...150 V , 110...600 V
Frequency	35...80 Hz
Permanent overvoltage	800 V
Consumption	< 500 uA
Accuracy	
Voltage	Cl 1 +/- 2 dig.
Frequency	+/- 0,01 Hz
Phase angle	+/- 0,5°

Display	4 digits
Colour	Red, high efficiency
Cycle of presentation	2 / s
Auxiliary LED	30
Environmental conditions	
Storage temperature	- 40 ºC / +70 ºC
Working temperature	-10 ºC / +65 ºC
Assembly features	
Casing colour	Anthracite grey
Casing material	Self extinguishing ABS
Protection degree	Front: IP 54 (optional, IP 65)
Weight	0,35 kg
Standards	**IEC 1010, IEC 348, IEC 664, IEC 801, EN 50081-1, EN 50082-2**

CODE

M	1	4	6	X	X	0	0	X

Type	
Synchro Max	2
Synchro Max PID	3

Measuring range	
30 ... 150 V	4
110 ... 600 V	5

Voltage	
400 V a.c.	-
110 V a.c.	1
230 V a.c.	2
9 ... 18 V d.c.	8
18 ... 36 V d.c.	7
36 ... 72 V d.c.	9

Isolation meter

- Casing DIN 96
- Class 1.5
- Isolated or impedance neutral system (IT system)

The **MEG-1000** measures and checks, using a relay, the isolating resistance between a phase and earth in a neutral isolated or impeded line (IT). The amount of isolating resistance may be displayed on a galvanometric indicator on the front of the equipment.

To carry out the Measuring, the equipment applies a direct, 24 Vd.c. current between the phase and earth and measures the leakage current flowing through the isolating resistances in the system.. This current determines the isolation resistance.

The equipment has two timed output relays, one which operates on the maximum (trips when the resistance exceeds a preset value) and another which operates on the minimum (trips when the isolation resistance is below another preset value). Both relays have a trip point and a connection delay time which may be set by using the potentiometers located at the back of the equipment.

In the event that the isolation resistance is between the maximum and minimum values defined by the potentiometers, the NORMAL LED on the front lights up. When the resistance is outside the defined margin, either above or below, the ALARM LED lights up on the front.

Type	MEG-1000
Class	1,5
Scale	90º
Frequency	50...60 Hz
a **b** **c**	96 96 73,8
Weight (g)	0,708
Ω (two scales)	0...500 kΩ 0.5...5 MΩ
Code	M15051

Features

Type	MEG-1000
Input circuit	
Comsumption	5 V·A
Frequency	20 ... 100 Hz
Overvoltages	1,2 U_n permanent 2 U_n for 5 s
Accuracy	1,5 % FS
Environmental conditions	
Operating temperature	+10 ºC / +30 ºC
Limit temperature	- 25 ºC / +40 ºC

Type	MEG-1000
Assembly features	
Dimensions	See previous table
Weight	See previous table
Casing type	panel
Terminal protection grade	IP 00
Casing protection grade	IP 52
Insulation voltage	2 kV, 50 Hz, 1 min between mechanism and casing
Standards	**BS 89, EN 60051, IEC 144, UL 94, DIN 43780, IEC 51, UNE 21318**

HOURS RUN METER

- Casing DIN 48-72-96
- Class 1.5
- 50 or 60 Hz

Hour counter			
Type	**CH 48**	**CH 72**	**CH 96**
Class	1,5		
Display	5+2		
a **b** **c**	48 48 48	72 72 62,9	96 96 62,9
Weight (g)	50	125	180
	M14911	M14921	M14931

FEATURES

Input circuit	
Current	10 mA
Frequency	50 ó 60 Hz
Display	Mechanical
Digits	1,5 x 3,5 mm with magnifier.
Maximum value	99 999.99
Environmental conditions	
Operating temperature	+10 ºC / +30 ºC
Limit temperature	- 25 ºC / +40 ºC

Assembly features	
Dimensions	See previous table
Weight	See previous table
Casing type	panel
Terminal protection grade	IP 00
Casing protection grade	IP 52
Insulation voltage	2 kV, 50 Hz, 1 min between mechanism and casing
Standards	**BS 89, EN 60051, IEC 144, UL 94, DIN 43780, IEC 51, UNE 21318, CE**

ACCESSORIES / OPTIONS

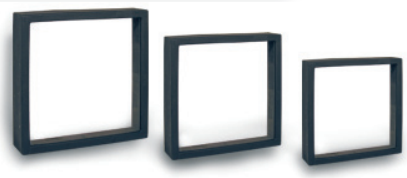

IP Protection

	48 x 48	**72 x 72**	**96 x 96**	**144 x 144**
IP 54	M19931	M19932	M19933	M19934
IP 65	M19941	M19942	M19943	M19944

Terminals cover (IP 20)

72 x 72	96 x 96	144 x 144
M19922	M19923	M19924

Options

See price list for its code

Tropicalisation
Adjustable pointer
Anti-reflection glass
Makrolon glass
Inner lighting (6-12-48 V d.d.) panel only
Scale adjustments 1, 1.2, 3, 4, 5, 6
Central zero
Moved zero

DIMENSIONS / CONNECTION

EC / BC

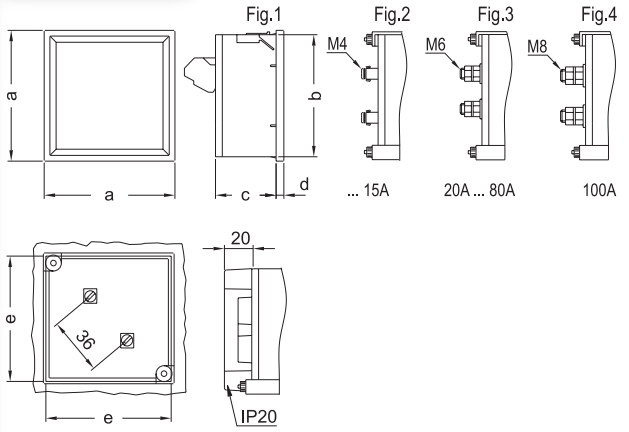

EZC / ZC

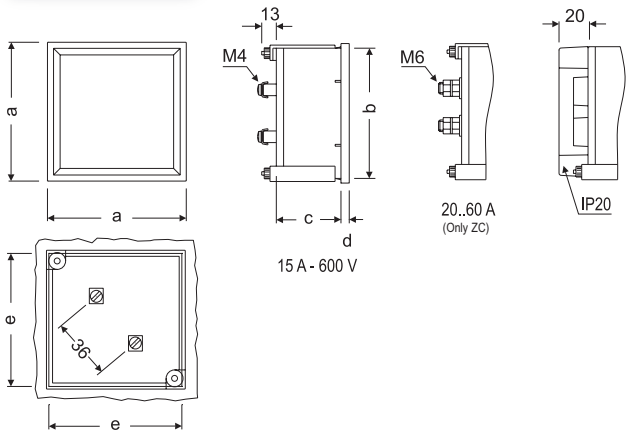

Type	Fig. EC	Fig. BM	Fig. ZC	Fig. EZC	a	b	c	d	e
48	1-3	1-3	1	-	48	44,7	61	5,2	45
72	1-3-4	2-3-4	1	1	72	67,2	43,5	5,7	68
96	1-3-4	2-3-4	1	1	96	91	43,5	5,7	92
144	2-3-4	2-3-4	1	-	144	137	64,5	7,3	138

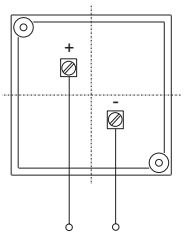

EC-FA, EC-F, EC-FN

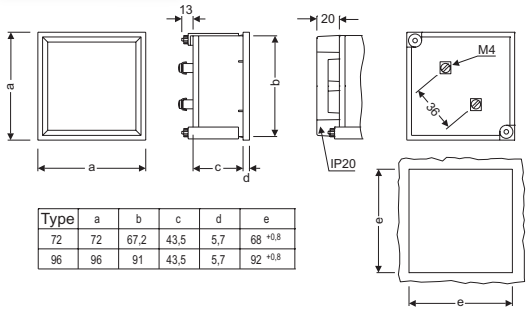

Type	a	b	c	d	e
72	72	67,2	43,5	5,7	68 +0,8
96	96	91	43,5	5,7	92 +0,8

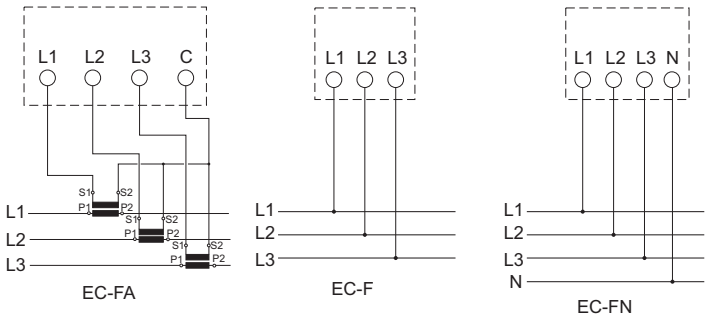

EM 45 / BM 45 / MMC 45 / HM 45

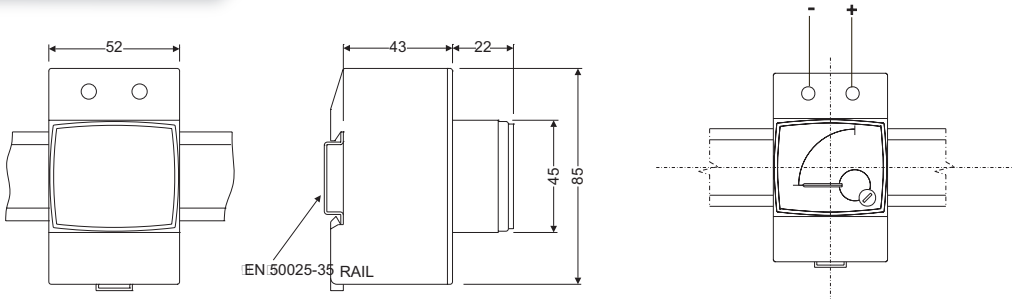

CEC/ CBC / PGR

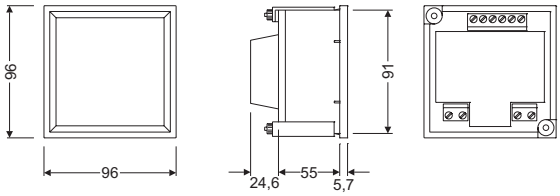

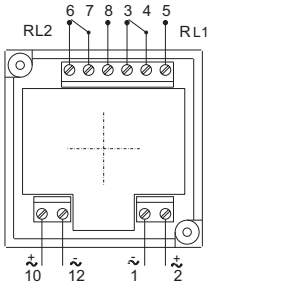

EMC / MC

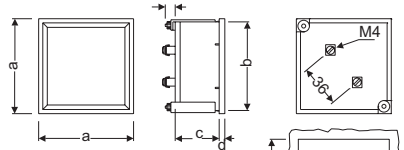

	a	b	c	d	e
MC48	48	44,7	61	5,2	45 +0,8
MC72	72	67,2	43,5	5,7	68 +0,8
EMC72	72	67,2	57,2	5,7	68 +0,8
96	96	91	43,5	5,7	92 +0,8
144	144	137	64,5	7,3	138 +1

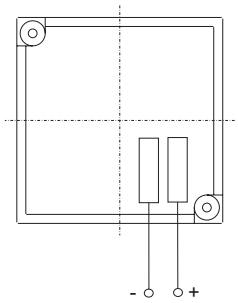

HC

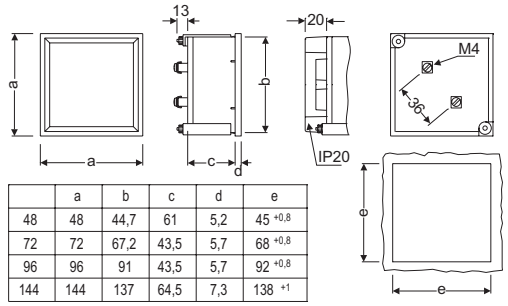

	a	b	c	d	e
48	48	44,7	61	5,2	45 +0,8
72	72	67,2	43,5	5,7	68 +0,8
96	96	91	43,5	5,7	92 +0,8
144	144	137	64,5	7,3	138 +1

HZC

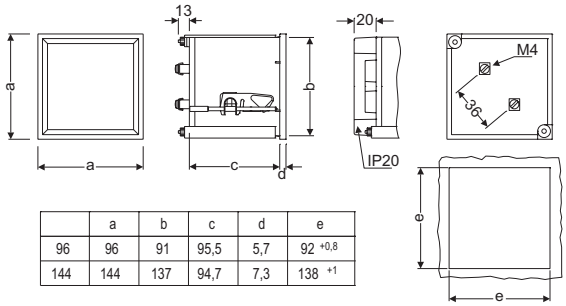

	a	b	c	d	e
96	96	91	95,5	5,7	92 +0,8
144	144	137	94,7	7,3	138 +1

HLC

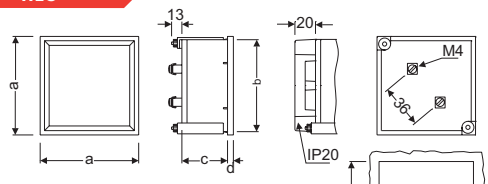

	a	b	c	d	e
72	72	67,2	43,5	5,7	68 +0,8
96	96	91	43,5	5,7	92 +0,8
96 (c)	96	91	57,2	5,7	92 +0,8
144	144	137	64,5	7,3	138 +1

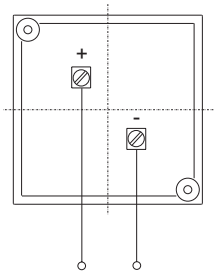

FEMC / FETC

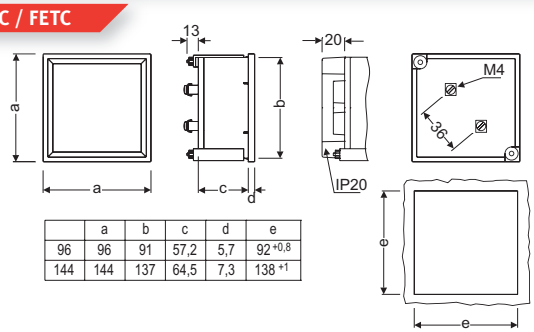

	a	b	c	d	e
96	96	91	57,2	5,7	92 +0,8
144	144	137	64,5	7,3	138 +1

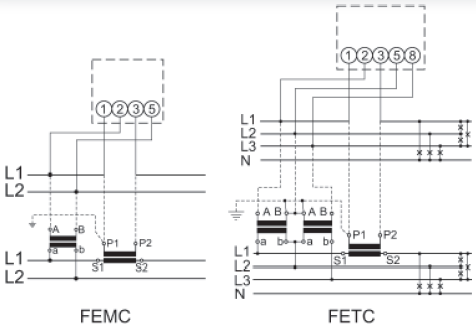

WMC / YTC

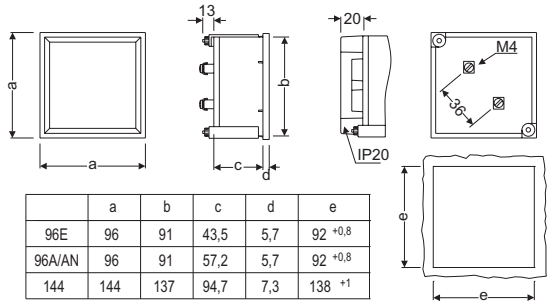

	a	b	c	d	e
96E	96	91	43,5	5,7	92 +0,8
96A/AN	96	91	57,2	5,7	92 +0,8
144	144	137	94,7	7,3	138 +1

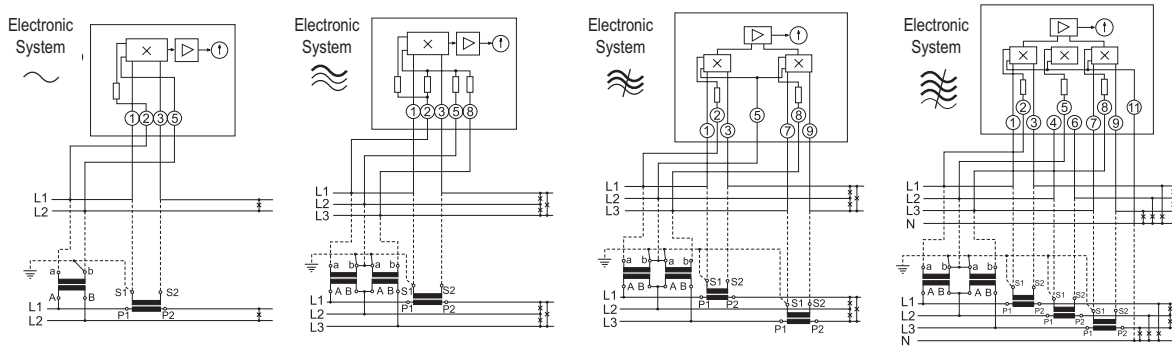

WMC WTCE WTCA WTCAN

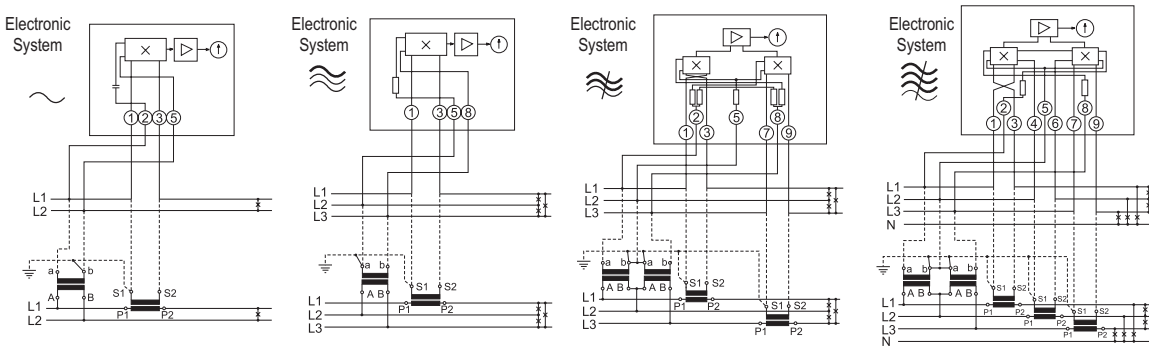

YMC YTCE YTCA YTCAN

FMZ / FTZ / PIC

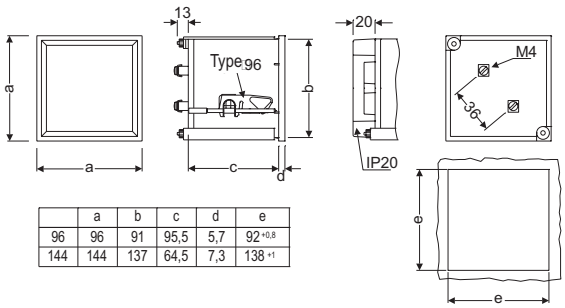

	a	b	c	d	e
96	96	91	95,5	5,7	92 +0,8
144	144	137	64,5	7,3	138 +1

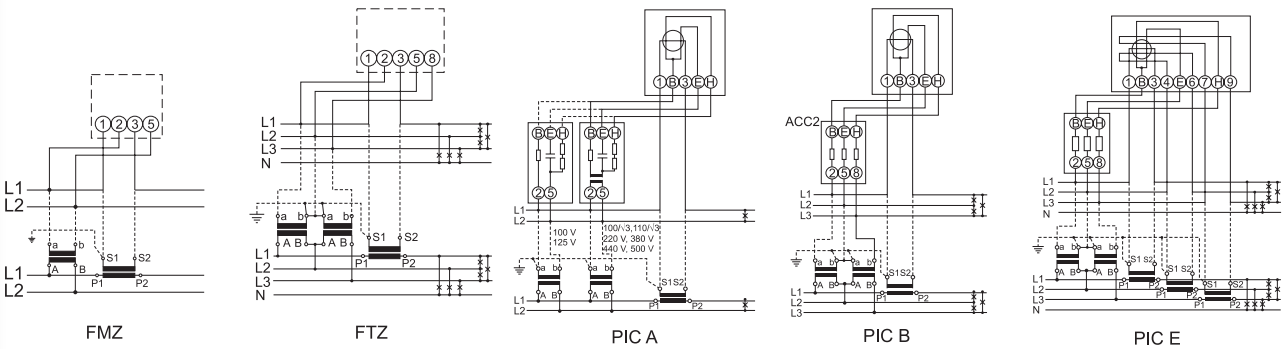

FMZ FTZ PIC A PIC B PIC E

2 EC

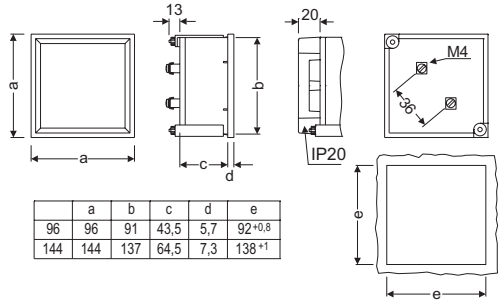

	a	b	c	d	e
96	96	91	43,5	5,7	92 +0,8
144	144	137	64,5	7,3	138 +1

2 HC / 2 HLC

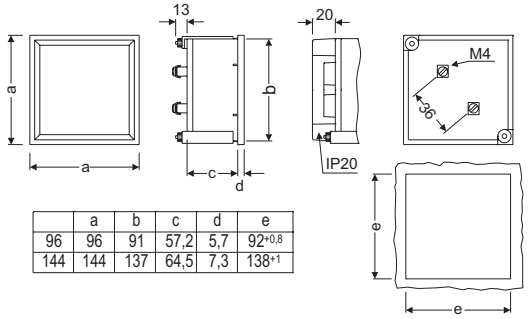

	a	b	c	d	e
96	96	91	57,2	5,7	92 +0,8
144	144	137	64,5	7,3	138 +1

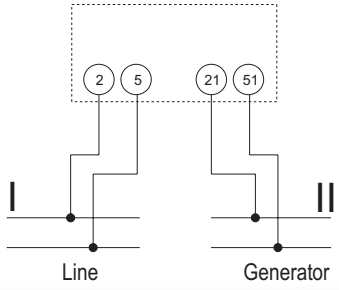

UC / CUC

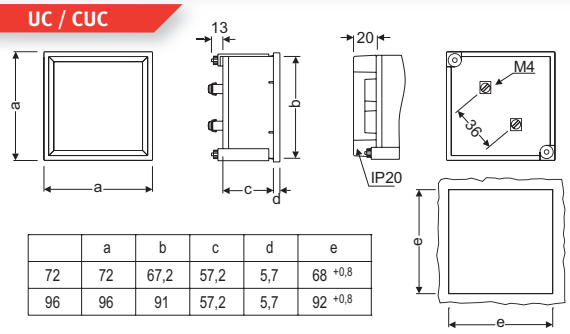

	a	b	c	d	e
72	72	67,2	57,2	5,7	68 +0,8
96	96	91	57,2	5,7	92 +0,8

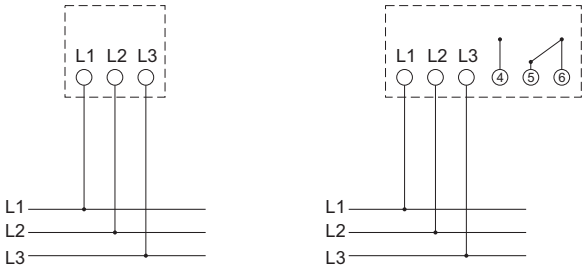

SMC / STC

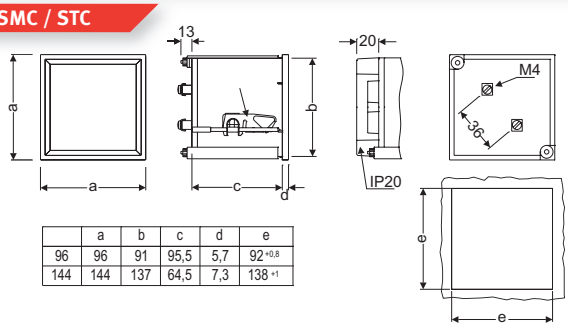

	a	b	c	d	e
96	96	91	95,5	5,7	92 +0,8
144	144	137	64,5	7,3	138 +1

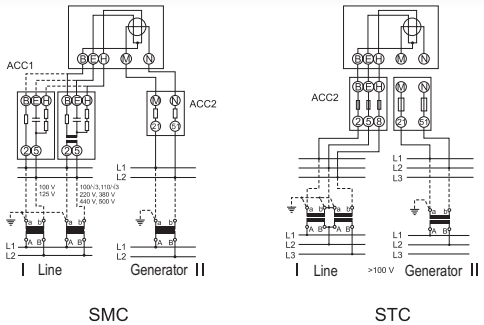

SYNCROMAX

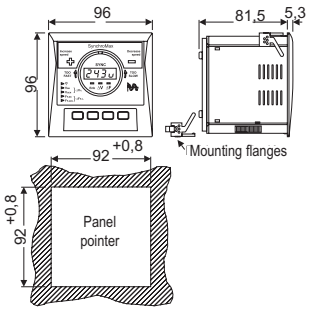

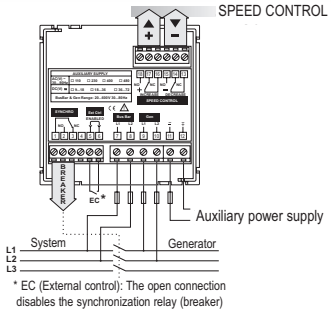

* EC (External control): The open connection disables the synchronization relay (breaker)

MEG-1000

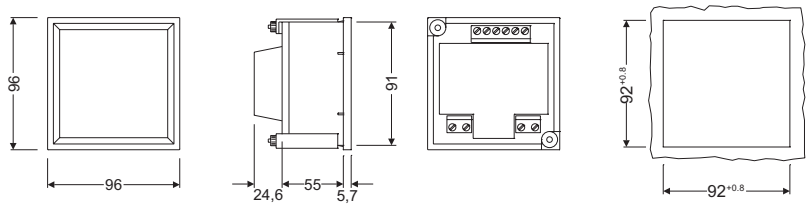

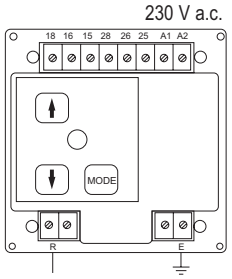

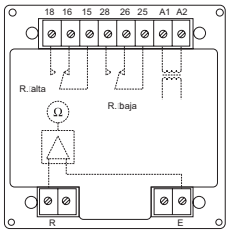

18, 16, 15: Normal relay
28, 26, 25: ALARM relay

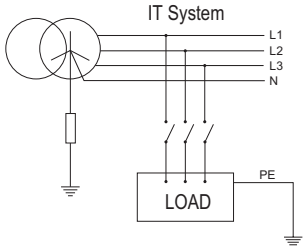

CH

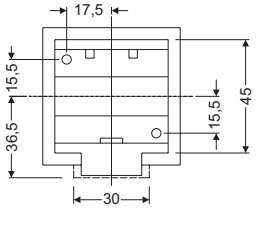

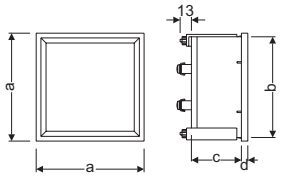
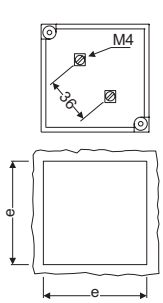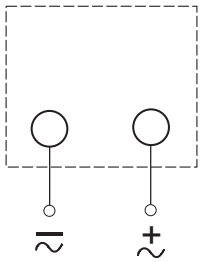
a	b	c	d	e
72	67,2	57,2	5,7	68 +0,8
96	91	57,2	5,7	92 +0,8